Exploded views

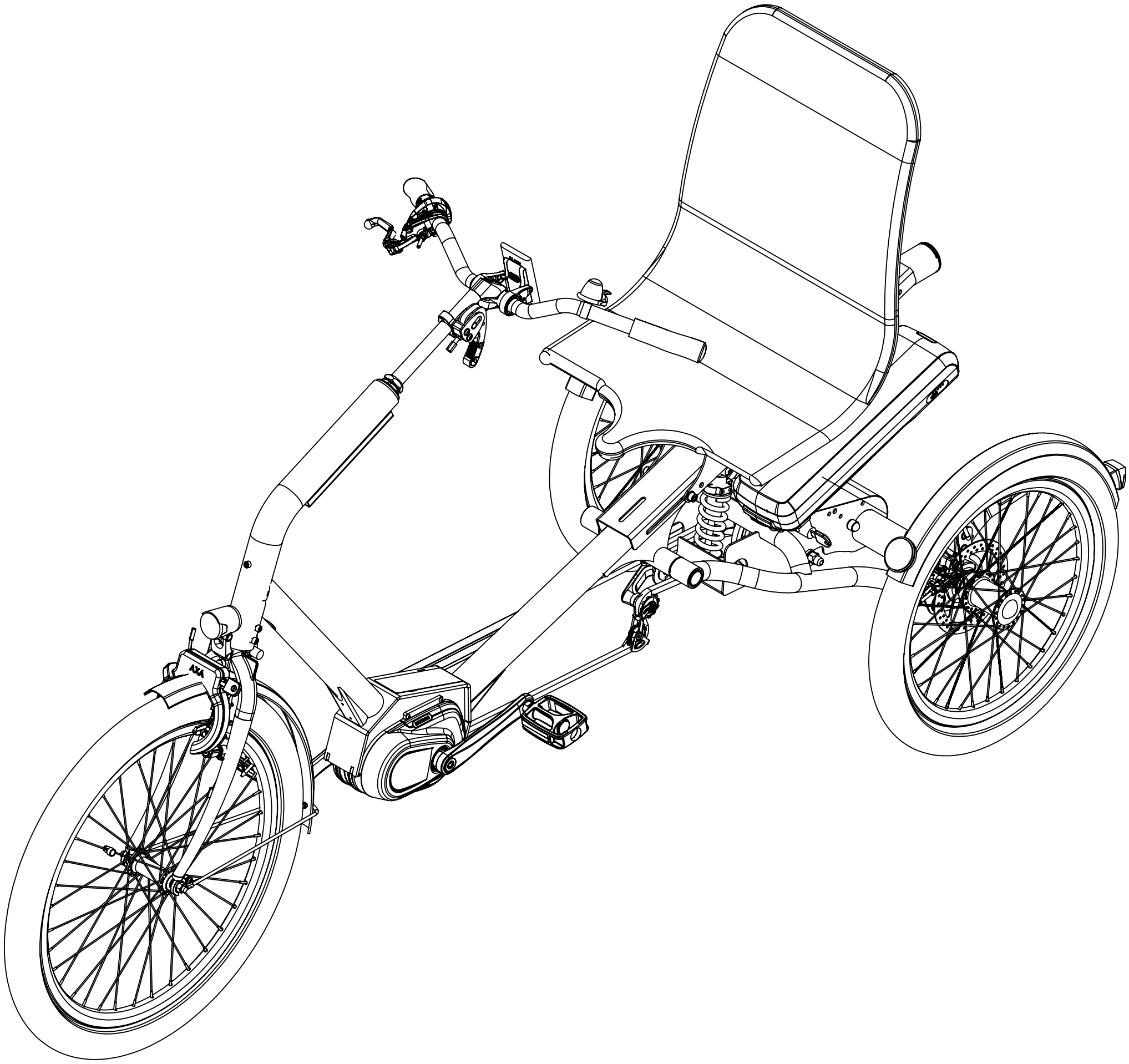

Data of issue: **3-6-2024**	Be advised that in some cases the exploded views, might contain other parts beside what is shown in the illustration due to interchangeable accessories and options	Huka BV Munsterstraat 13 7575 ED Oldenzaal The Netherlands
Model: **Cortes**	This publication has been designed for use by Huka dealers, and may be updated periodically. Huka policy is one of continuous product improvement and the right is reserved to alter specifications at any time without prior notice. Whilst every care has been taken to ensure correctness of information, it is impossible to guarantee complete freedom from omissions and errors, or to accept liability arising from such errors and omissions	
Production period: **2021-present day**		

Drawing number:	Drawing name: Cortes

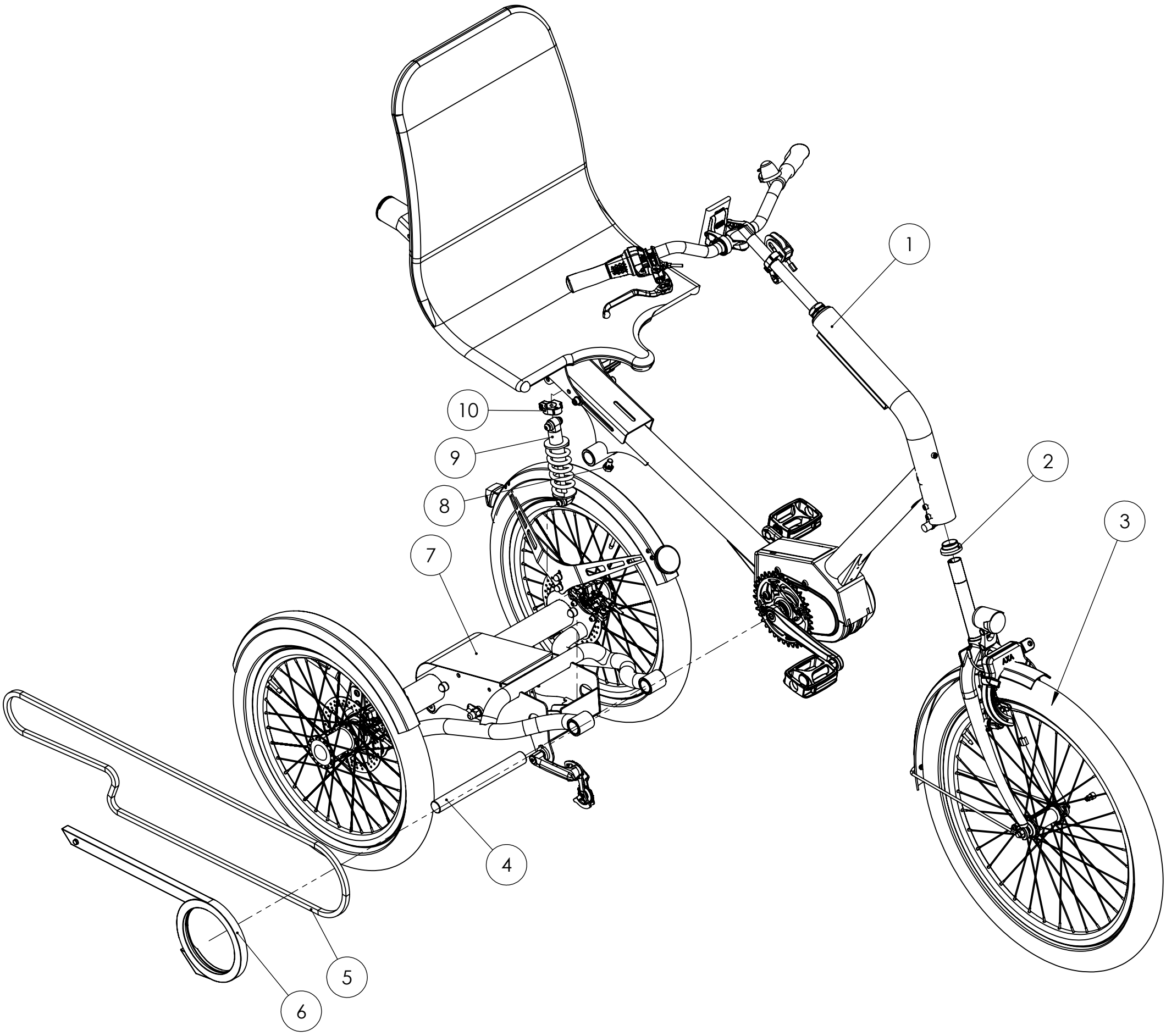

10	460010	Mounting clamp
9	406243	Shock absorber 165mm 650lbs
8	423451	Hexagon head screw DIN 933 zinc plated M10 X 16 8.8
7	-	Subframe rear assembly
6	406262	Chain guard chainglider
5	408058	Chain 1/2 x 3/32
4	406215	Pivot shaft
3	-	Front fork assembly
2	426811	Headset bearing threaded 1 inch
1	-	Frame assembly Cortes
POS	**ART. NO.**	**NAME**

Drawing number:

Drawing name: **Front fork assembly**

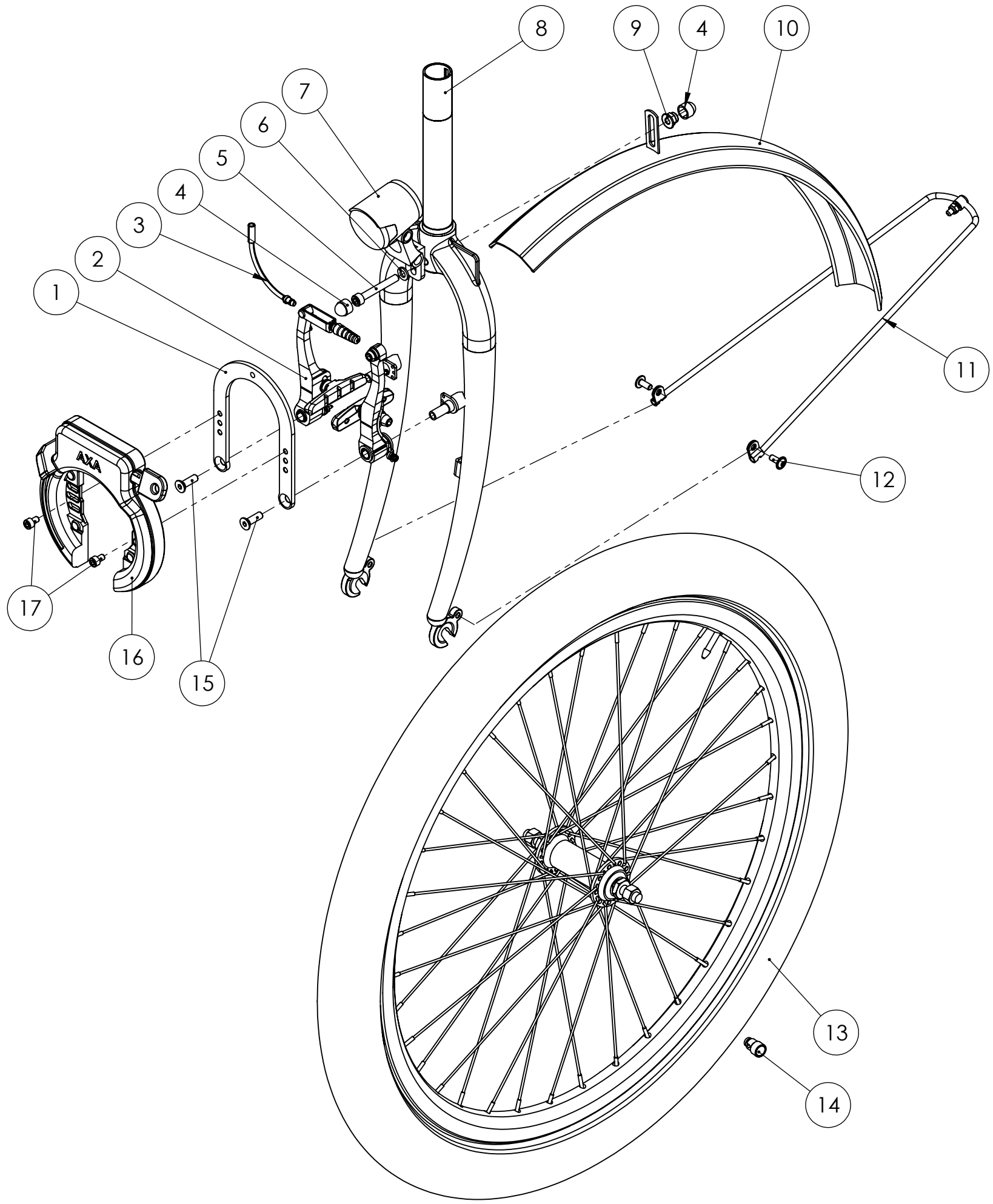

POS	ART. NO.	NAME
17	412953	Hex socket cap screw DIN 912 zinc plated M5 X 8 8.8
16	426582	Ringlock AXA Solid
15	464058	Hex socket countersunk head screw ISO 10642 zinc plated M6 X 20 8.8
14	401948	Speedsensor Bafang 1350mm
13	407205	Front wheel 24"
12	438268	Hex socket button head screw with flange ISO 7380-2 zinc plated M5 X 12 8.8
11	426763	Fender bracket
10	406231	Fender 24" front
9	438267	Prevailing torque hex nut with flange DIN 6926 zinc plated M6 8.8
8	406209	Front fork 24"
7	407210	Front light E-bike
6	410109	Plain washer DIN125-1A zinc plated M6
5	412963	Hex socket cap screw DIN 912 zinc plated M6 X 45 8.8
4	475222	Bolt protection cap M6
3	435063	V-brake noodle 90°
2	401528	Mechanical v-brake Shimano BR-T4000
1	404427	Ring lock bracket

Huka BV, Münsterstraat 13, 7575 ED Oldenzaal, tel: +31 (0)541-572472, info@huka.nl

Published on: 04/06/24. Always consult www.huka.nl/wmo for the most up-to-date exploded views.

Drawing number: 407205 | Drawing name: Front wheel 24"

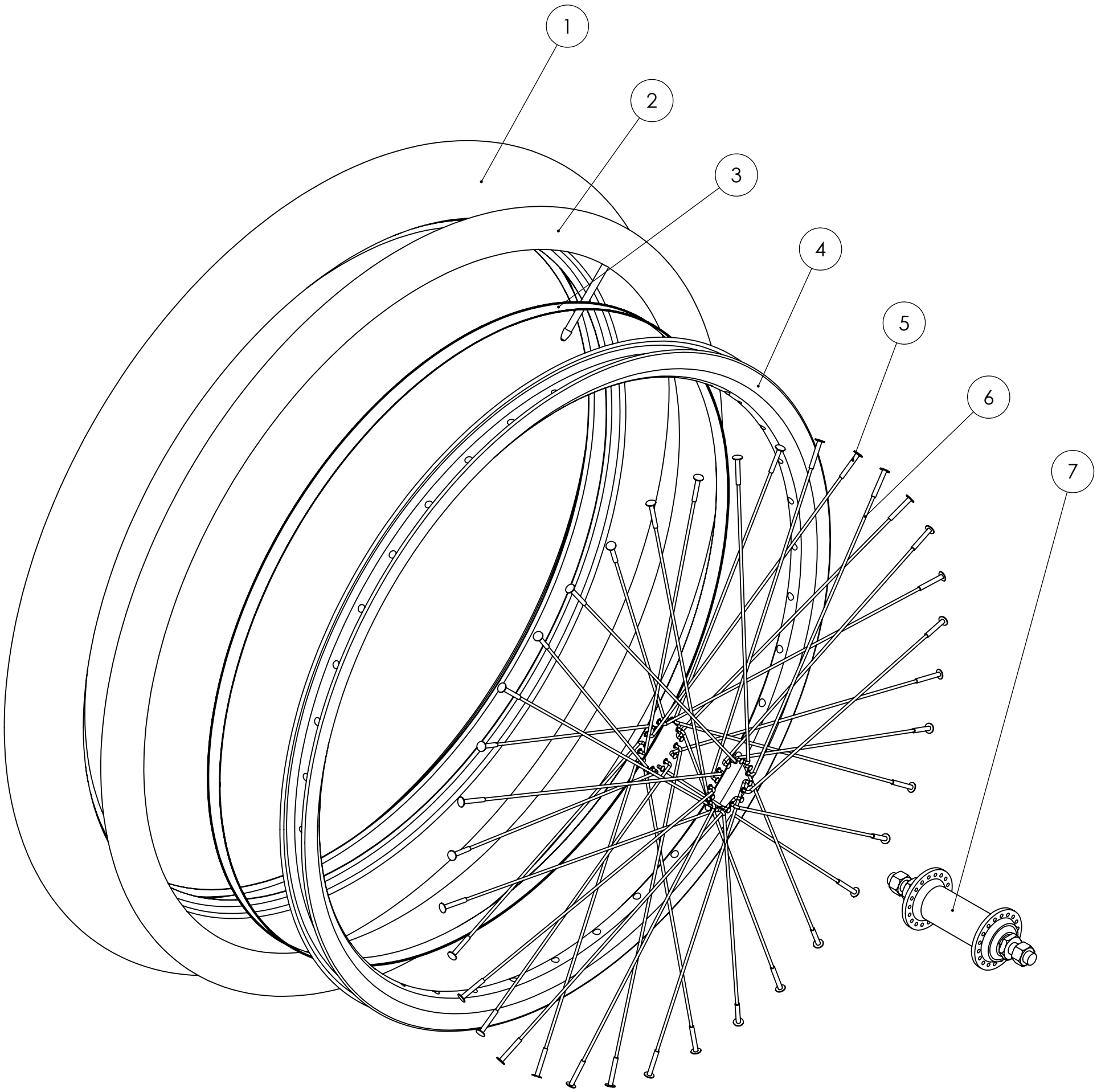

7	401702	Hub front Shimano TX500
6	401762	Spoke 13x230 stainless steel
5	435067	Nipple 13G
4	426506	Rim 24" X-plorer
3	426530	Rim tape 15mm
2	401350	Inner tube 24" Schwalbe DV 55-507
1	406302	Tire 24" Schwalbe Big Ben Plus 55-507
POS	**ART. NO.**	**NAME**

Drawing number:	Drawing name: **Frame assembly Cortes**

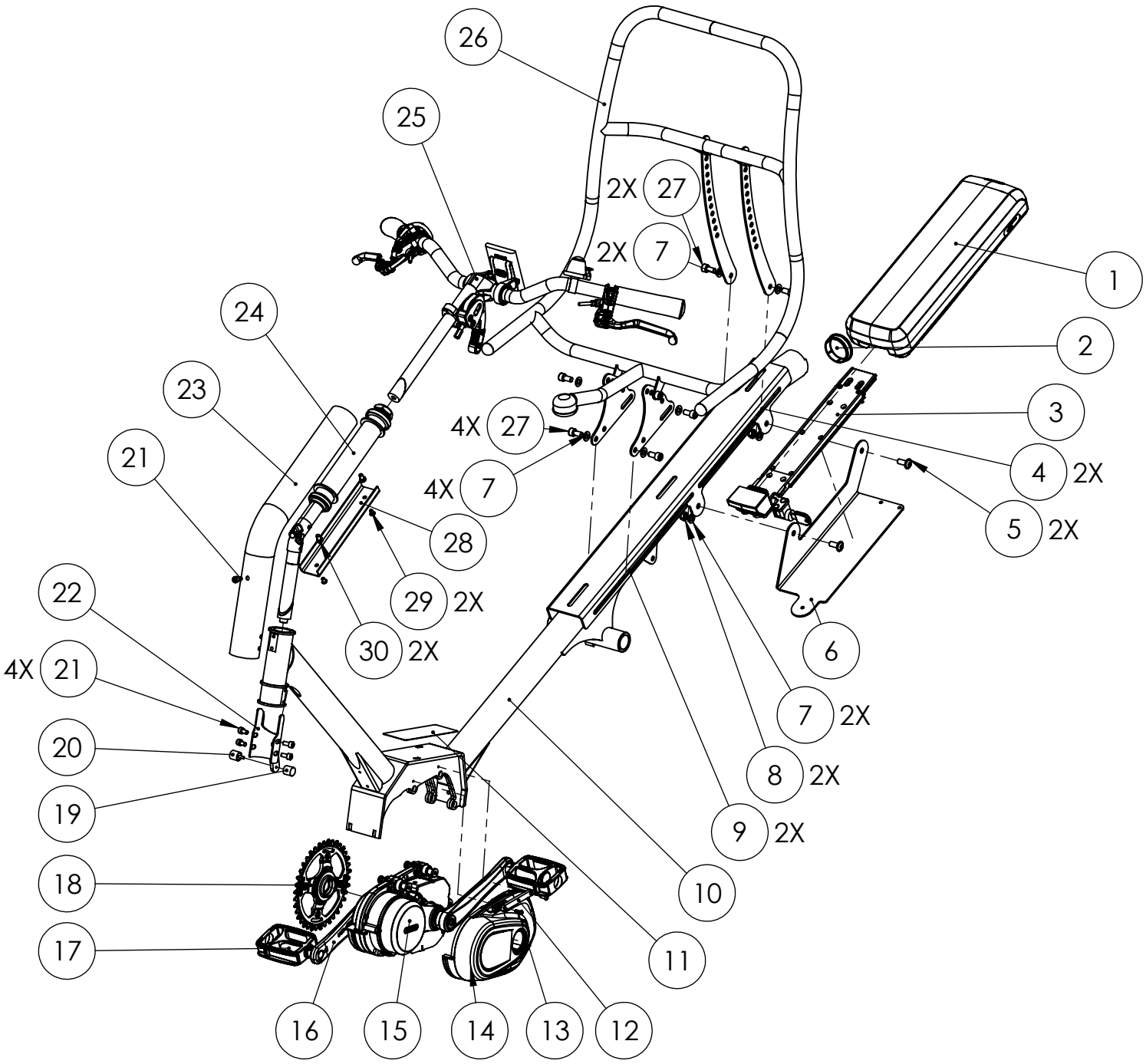

30	414301	Hex low socket cap screw DIN 7984 zinc plated M6 X 10 8.8
29	451603	Hex socket button head screw ISO 7380-1 stainless steel M5 x 8 A2
28	406237	Cable guide
27	412138	Hex socket cap screw DIN 912 zinc plated M8 X 16 8.8
26	-	Seat assembly
25	-	Steer assembly Cortes
24	406210VM	Head tube and steering stem set
23	406202	Head tube
22	406203	Welded subframe steering limiter
21	475154	Hex socket cap screw DIN 912 zinc plated M6 X 12 8.8
20	406246	Threaded bumper male
19	406247	Threaded bumper female
18	401966	Chainring Bafang 38T with spline spider
17	401645	Pedal set standard
16	401937	Crankset Bafang 170mm
15	401947	Midmotor Bafang M400 250W freewheel
14	401961	Midmotor Bafang M400 plastic cover
13	451391	Hex socket button head screw ISO 7380-1 stainless steel M4 x 12 A2
12	401931	Mounting plate M400
11	406305	Anti-slip grip tape
10	406270	Welded frame
9	406212	Seat fixation plate front
8	410204	Prevailing torque hex nut DIN 985 zinc plated M8
7	410110	Plain washer DIN125-1A zinc plated M8
6	406192	Support bracket battery Bafang
5	451220	Hex socket button head screw with flange ISO 7380-2 zinc plated M8 X 20 8.8
4	406213	Seat fixation plate back
3	401939	Battery slider Bafang 932mm
2	497345	Insert round Ø50.8
1	401930	Battery Bafang 43V 450Wh
POS	**ART. NO.**	**NAME**

Drawing number: 406210VM

Drawing name: Head tube and steering stem set

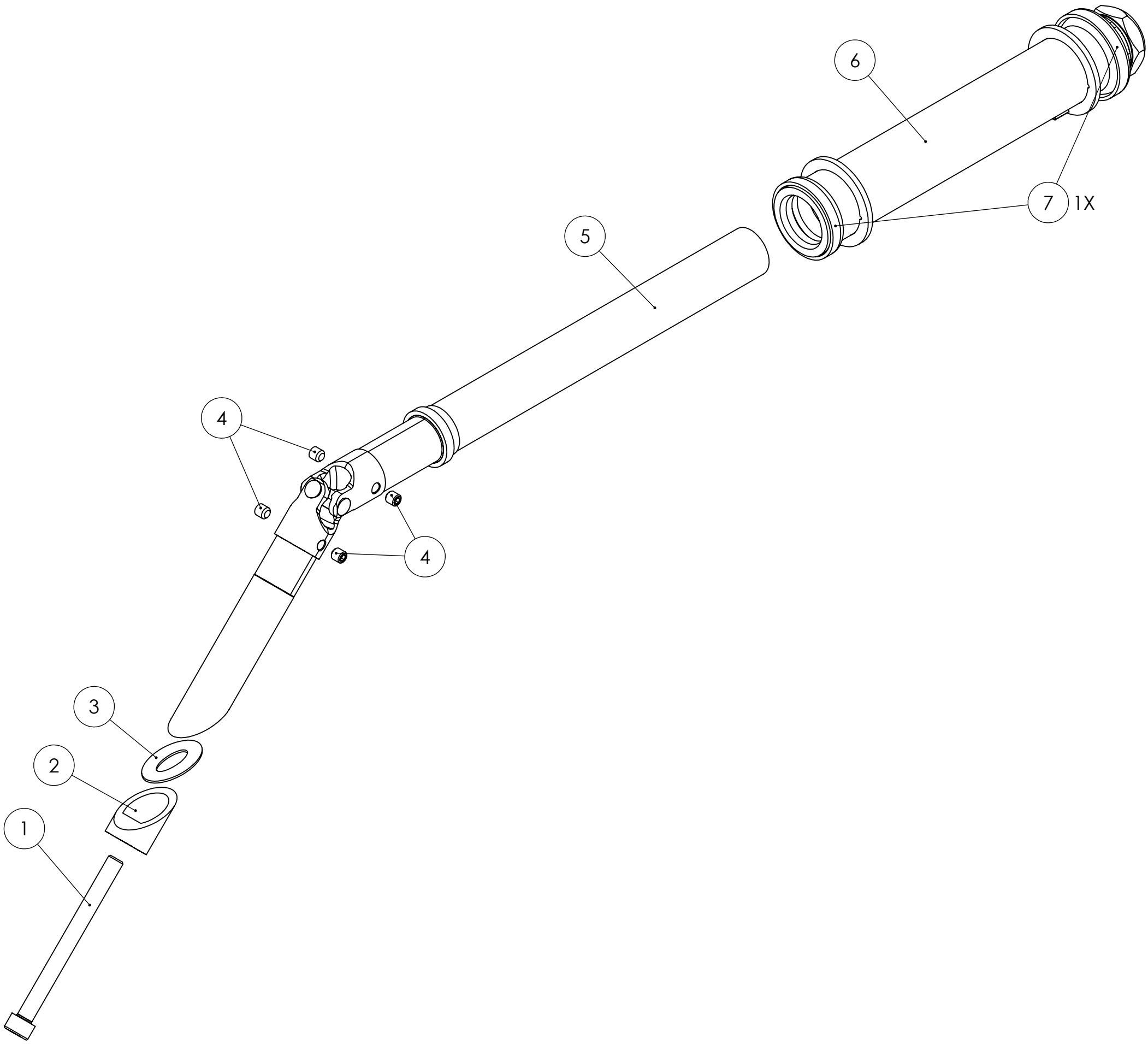

7	426811	Headset bearing threaded 1 inch
6	406205	Welded subframe head tube
5	406207	Welded subframe steering stem
4	412965	Hex socket set screw DIN 913 zinc plated M6 X 6
3	409086	Ring oval
2	401029	Expander
1	427199	Hex socket cap screw DIN 912 zinc plated M8 X 90 8.8
POS	**ART. NO.**	**NAME**

Huka BV, Münsterstraat 13, 7575 ED Oldenzaal, tel: +31 (0)541-572472, info@huka.nl

Published on: 04/06/24. Always consult www.huka.nl/wmo for the most up-to-date exploded views.

Drawing number:	Drawing name: Steer assembly Cortes

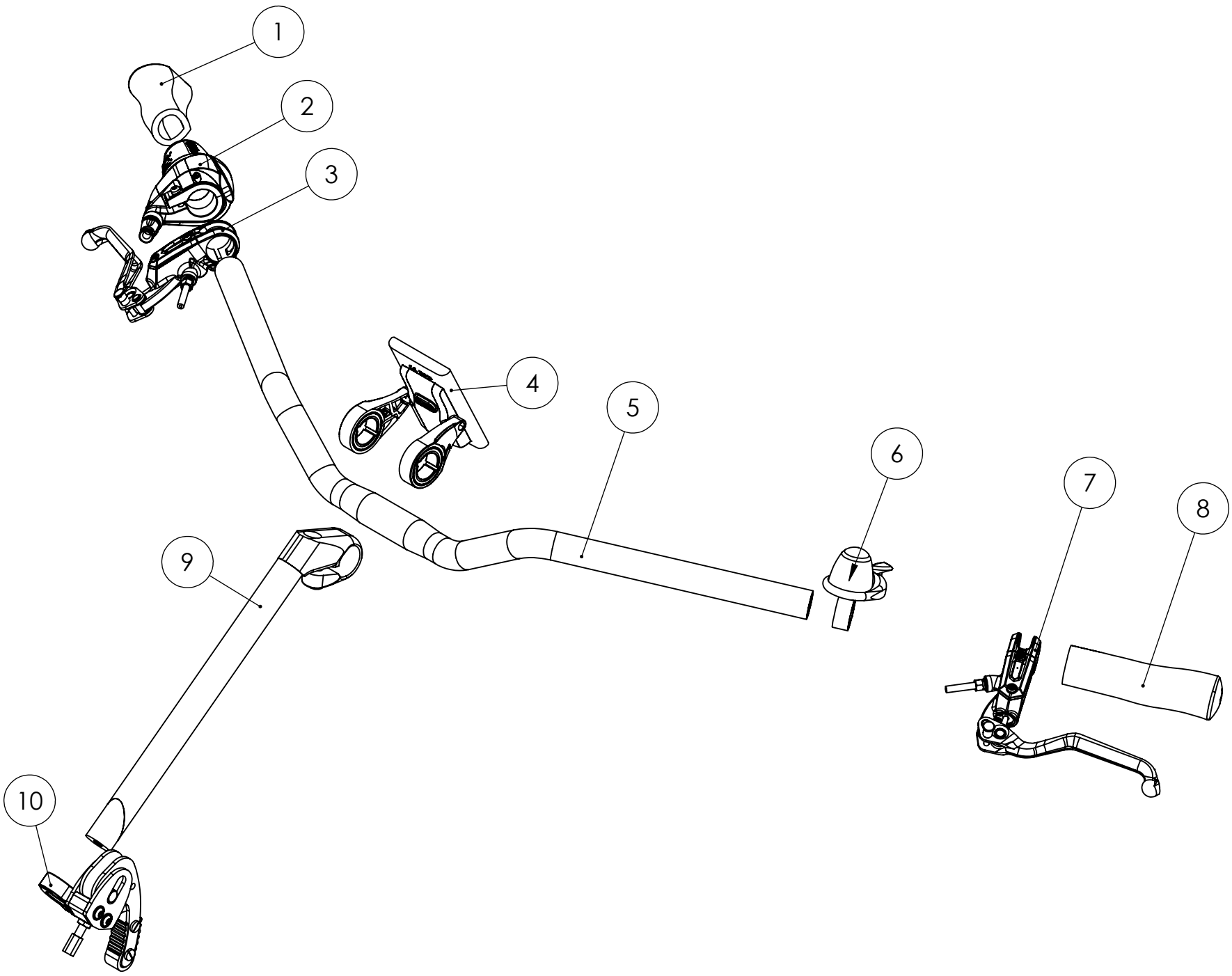

10	406153VM	Parking brake
9	426806	Stem Ø22.2
8	433012	Grip left
7	406254	Mechanical brake lever left
6	426827	Bell decibel
5	401424	Handlebar Ø22.2
4	401963	Display Bafang DP C18
3	406266	Hydraulic disk brake set Bengal rear right
2	431223	Gripshift Shimano 8V
1	433013	Grip right
POS	**ART. NO.**	**NAME**

Drawing number: 406133VM | Drawing name: Seat low pre-assembled

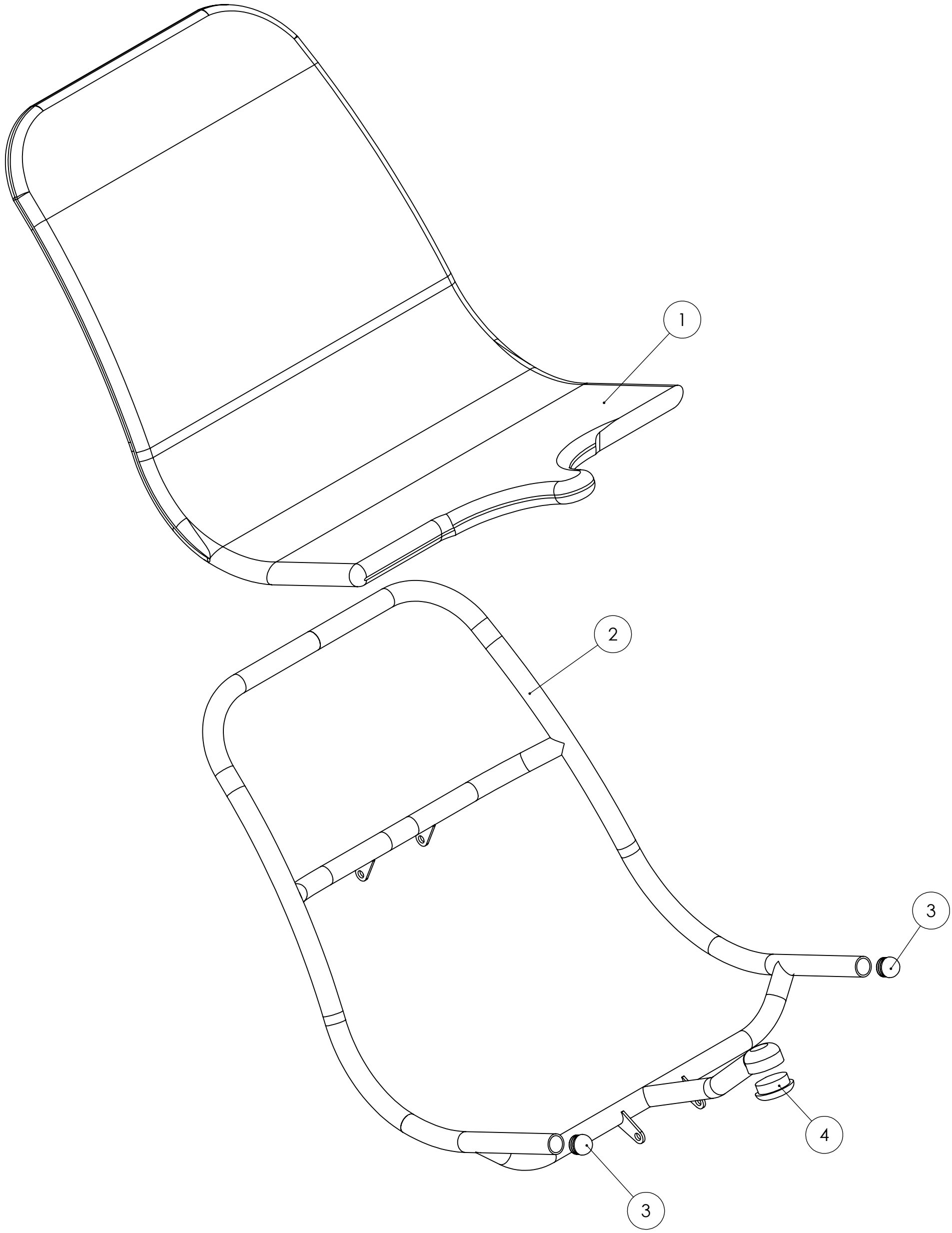

4	406245	Insert round Ø36
3	410746	Insert round domed Ø22
2	406268	Seat frame low
1	406269	Seat upholstery low
POS	**ART. NO.**	**NAME**

Huka BV, Münsterstraat 13, 7575 ED Oldenzaal, tel: +31 (0)541-572472, info@huka.nl

Published on: 04/06/24. Always consult www.huka.nl/wmo for the most up-to-date exploded views.

Drawing number:	Drawing name: Seat assembly

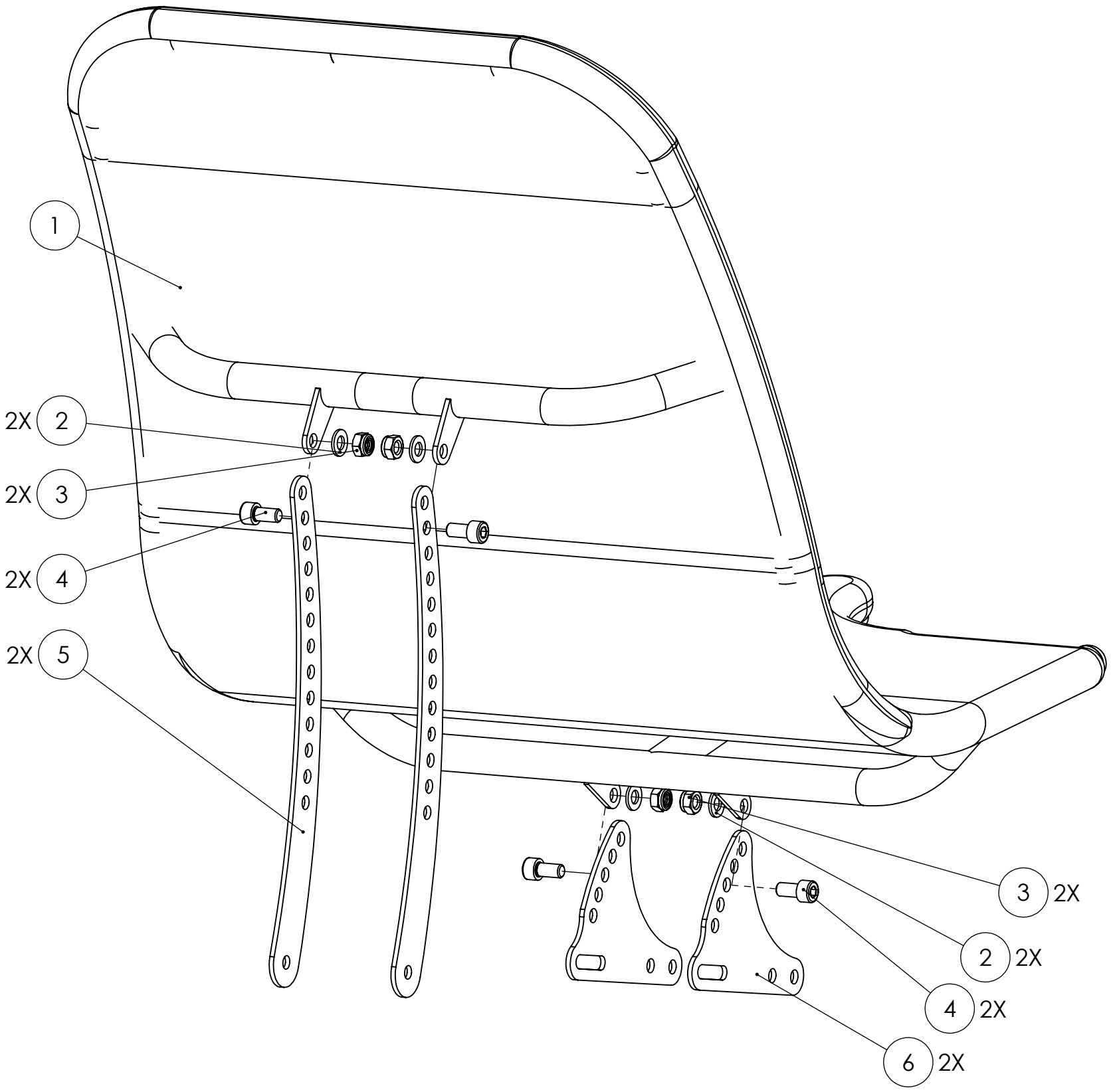

POS	ART. NO.	NAME
6	406218	Seat bracket seating
5	406219	Seat bracket back
4	412138	Hex socket cap screw DIN 912 zinc plated M8 X 16 8.8
3	410204	Prevailing torque hex nut DIN 985 zinc plated M8
2	410110	Plain washer DIN125-1A zinc plated M8
1	406133VM	Seat low pre-assembled

Drawing number:

Drawing name: **Subframe rear assembly**

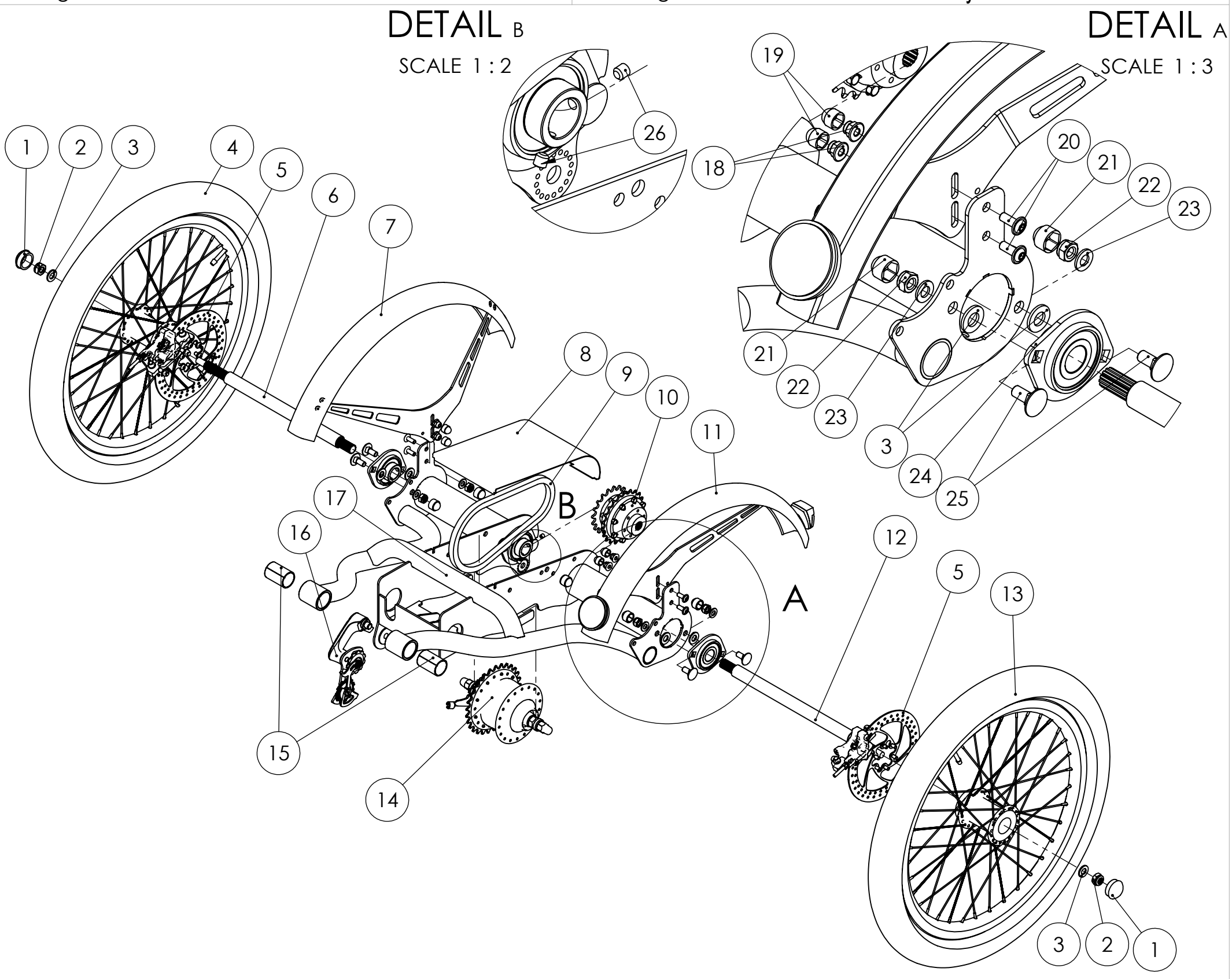

POS	ART. NO.	NAME
26	412965	Hex socket set screw DIN 913 zinc plated M6 X 6
25	410227	Carriage bolt DIN 603 zinc plated M8 X 20 4.8
24	406217	Bearing flanged
23	410110	Plain washer DIN125-1A zinc plated M8
22	410204	Prevailing torque hex nut DIN 985 zinc plated M8
21	464065	Bolt protection cap M8
20	451345	Hex socket button head screw with flange ISO 7380-2 zinc plated M6 X 16 8.8
19	475222	Bolt protection cap M6
18	438267	Prevailing torque hex nut with flange DIN 6926 zinc plated M6 8.8
17	406201	Welded subframe rear
16	406244	Chain tensioner
15	406216	Bushing straight 252840
14	406120VM	Gear hub Nexus 8V freewheel set
13	406420	Wheel 20" Rear
12	406410	Rear axle left
11	406330	Fender left back
10	406405VM	Differential with spline
9	426808	Chain 1/2 x 1/8
8	406235	Cover differential
7	406331	Fender right back
6	406411	Rear axle right
5	406266	Hydraulic disk brake set Bengal rear right
4	406421	Wheel 20" Rear
3	410080	Plain washer DIN125-1A zinc plated M10
2	412970	Prevailing torque hex nut DIN 985 zinc plated M10
1	411300	Protection cap Ø30

Huka BV, Münsterstraat 13, 7575 ED Oldenzaal, tel: +31 (0)541-572472, info@huka.nl

Published on: 04/06/24. Always consult www.huka.nl/wmo for the most up-to-date exploded views.

Drawing number: 406405VM | Drawing name: Differential with spline

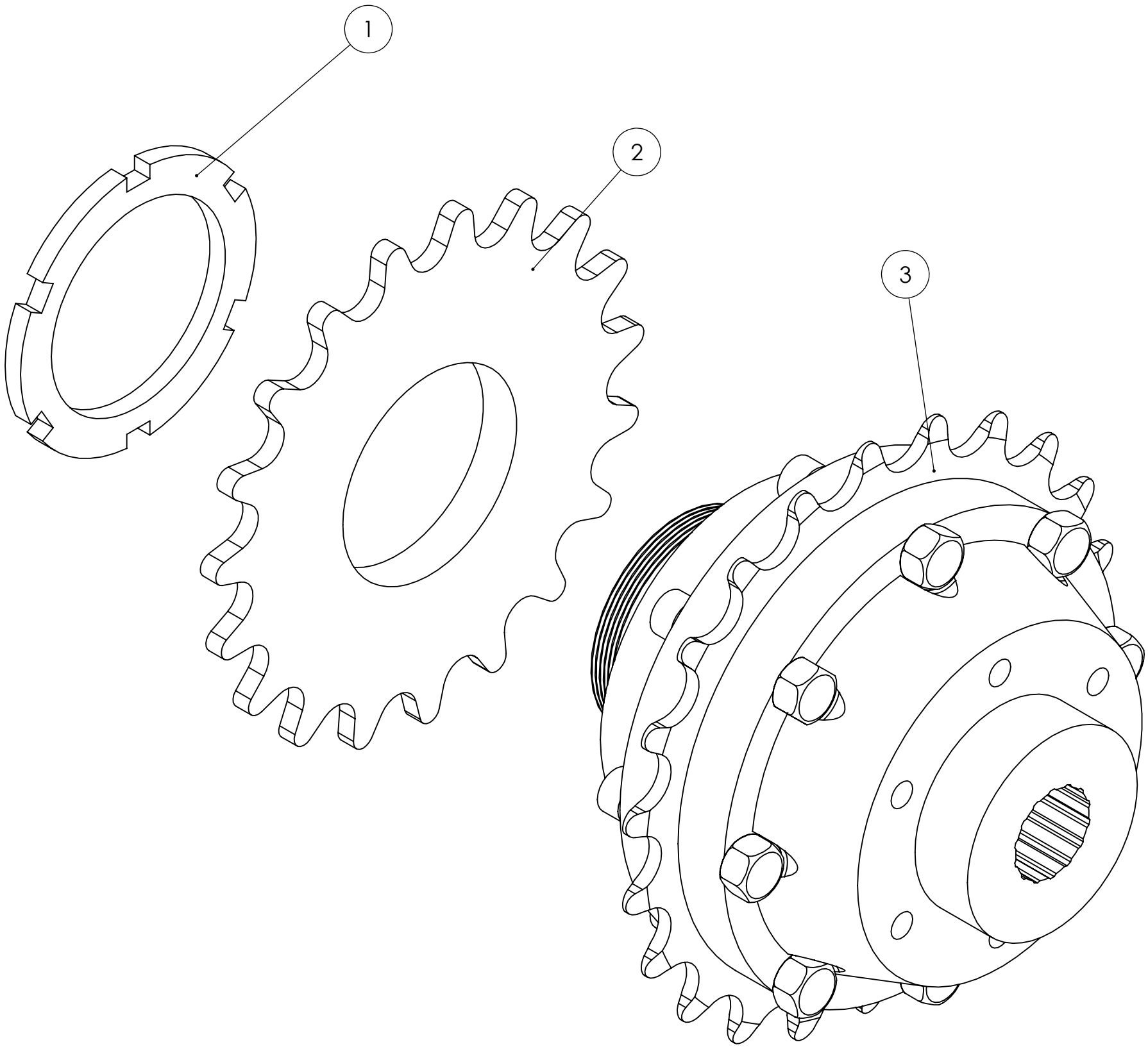

POS	ART. NO.	NAME
3	406405	Differential with spline
2	480797	Sprocket 3/32 19T threaded
1	480796	Lock nut bsa 1 3/8 X 24

Huka BV, Münsterstraat 13, 7575 ED Oldenzaal, tel: +31 (0)541-572472, info@huka.nl

Published on: 04/06/24. Always consult www.huka.nl/wmo for the most up-to-date exploded views.

Drawing number: 406120VM | Drawing name: Gear hub Nexus 8V freewheel set

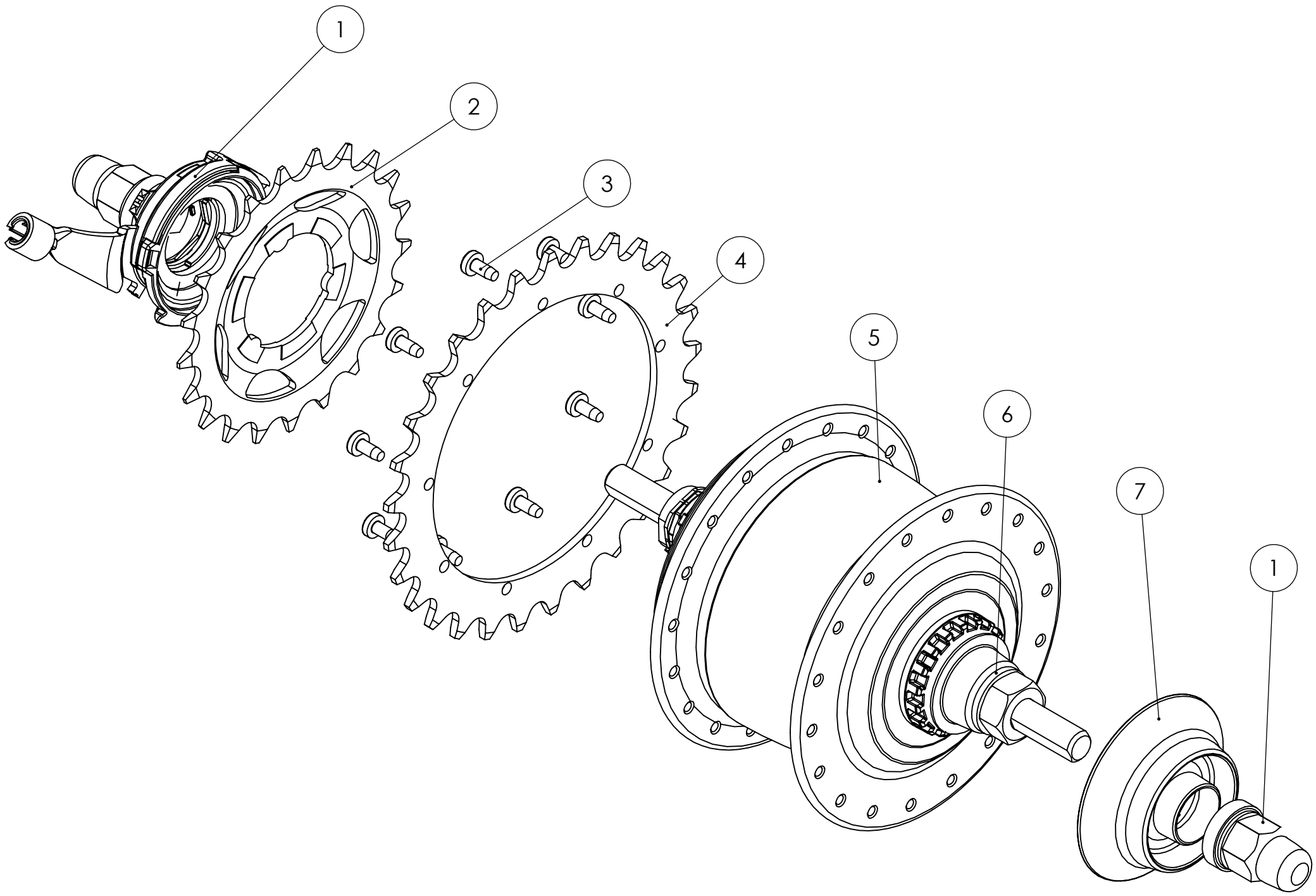

POS	ART. NO.	NAME
7	496024	Cover Nexus 8V
6	410080	Plain washer DIN125-1A zinc plated M10
5	431209	Gear hub Nexus 8V freewheel
4	497052	Sprocket 1/8" 29T Nexus 8
3	410163	Raised cheese head thread rolling screw DIN 7500-1 zinc plated M3.5 X 8 8.8
2	401689	Sprocket 3/32" 21T spline
1	409805	Shifter-unit Shimano Nexus 8

Drawing number: 406330

Drawing name: Fender left back

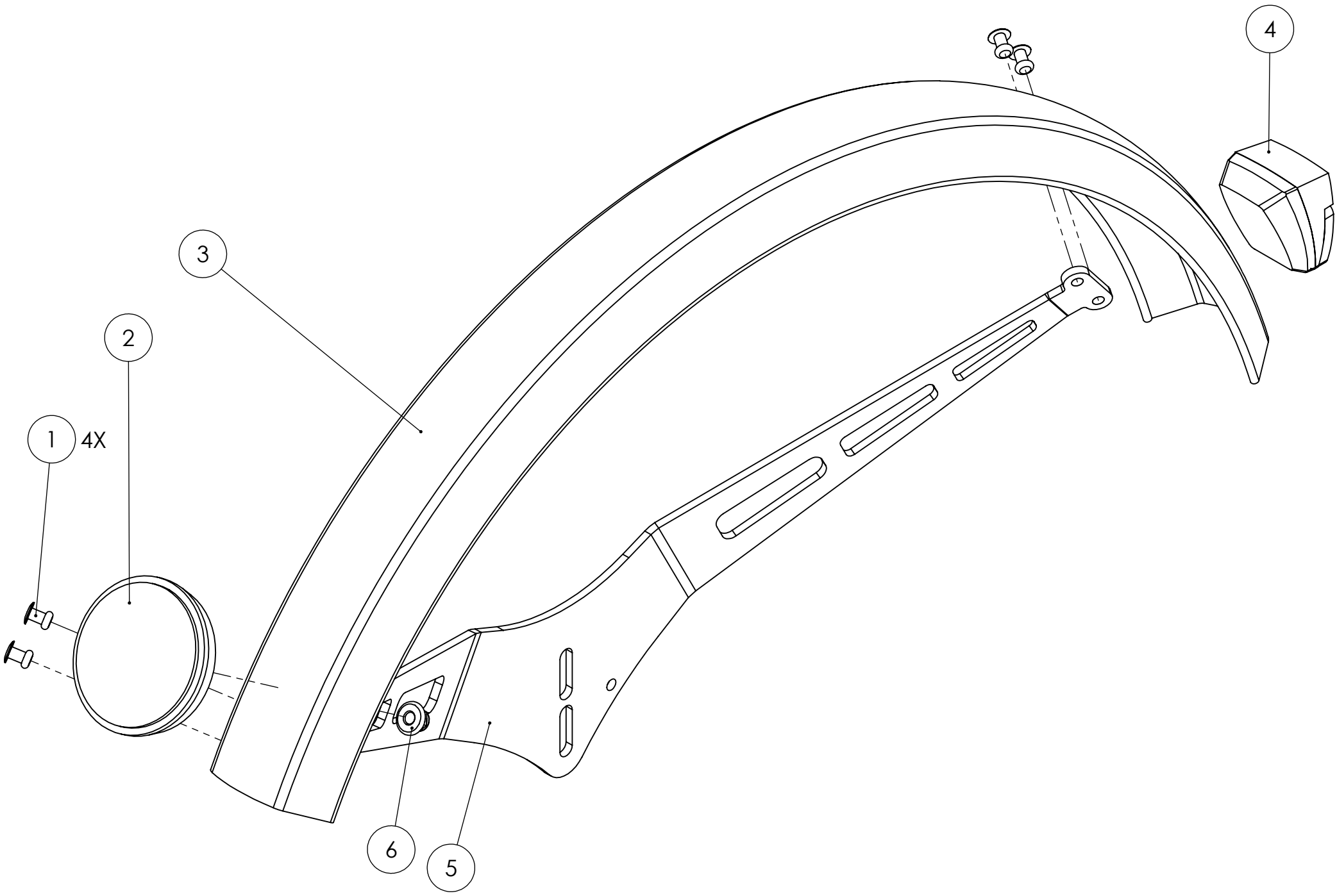

POS	ART. NO.	NAME
6	410212	Prevailing torque hex nut with flange DIN 6926 zinc plated M5 8.8
5	406208	Fender bracket back
4	401670	Rear light E-bike
3	406234	Fender 20" back
2	406293	Reflector white round 55mm
1	427338	Blind rivet aluminium Ø4 X 10

Drawing number: 406420 | Drawing name: Wheel 20" Rear

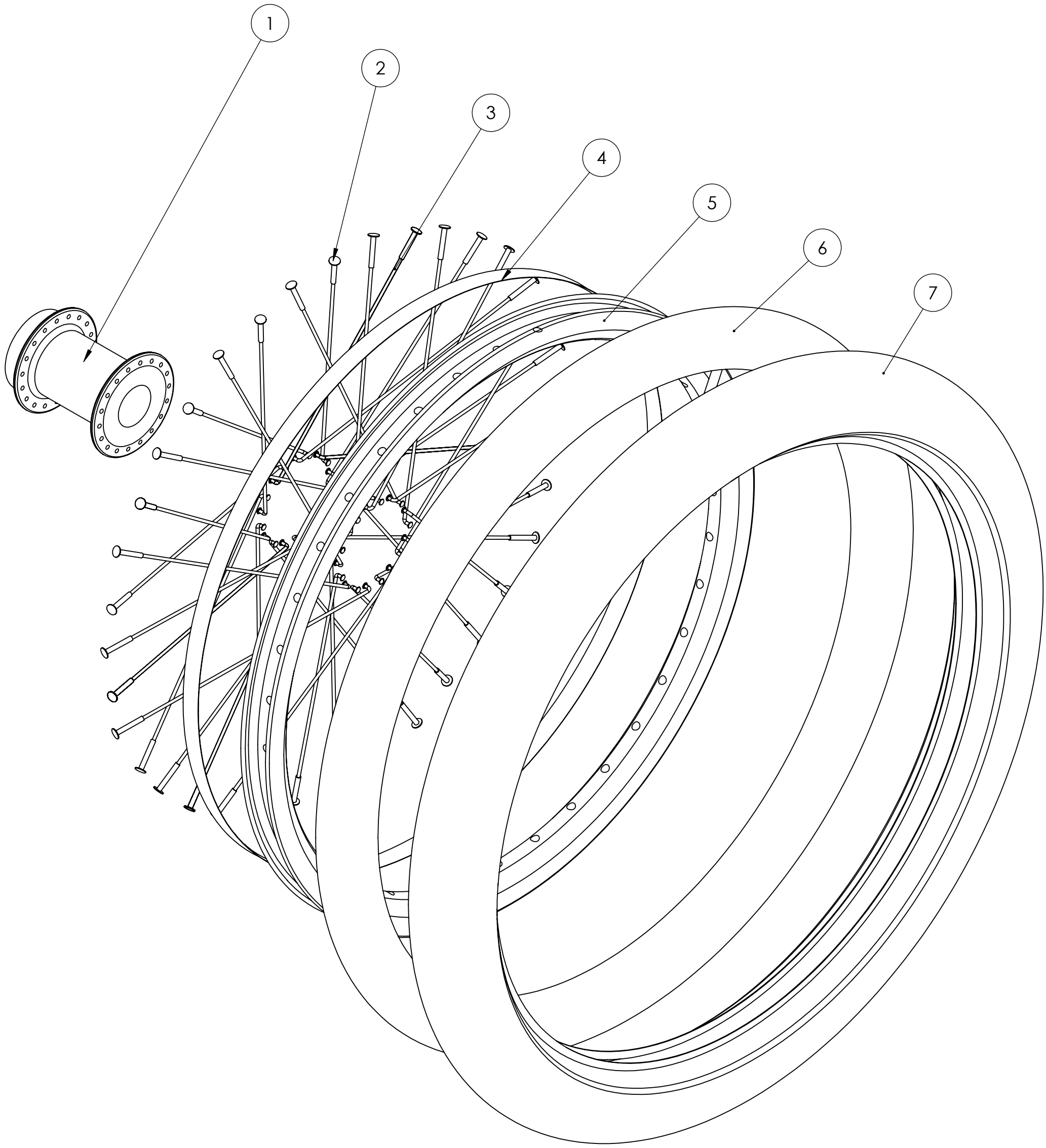

POS	ART. NO.	NAME
7	406303	Tire 20" Schwalbe big ben plus 55-406
6	401346	Inner tube 20" Schwalbe DV 55-406
5	406227	Rim 20" X-plorer
4	426530	Rim tape 15mm
3	426627	Spoke 13x178 stainless steel
2	435067	Nipple 13G
1	406400	Hub rear

Huka BV, Münsterstraat 13, 7575 ED Oldenzaal, tel: +31 (0)541-572472, info@huka.nl

Published on: 04/06/24. Always consult www.huka.nl/wmo for the most up-to-date exploded views.

Drawing number: 406331

Drawing name: Fender right back

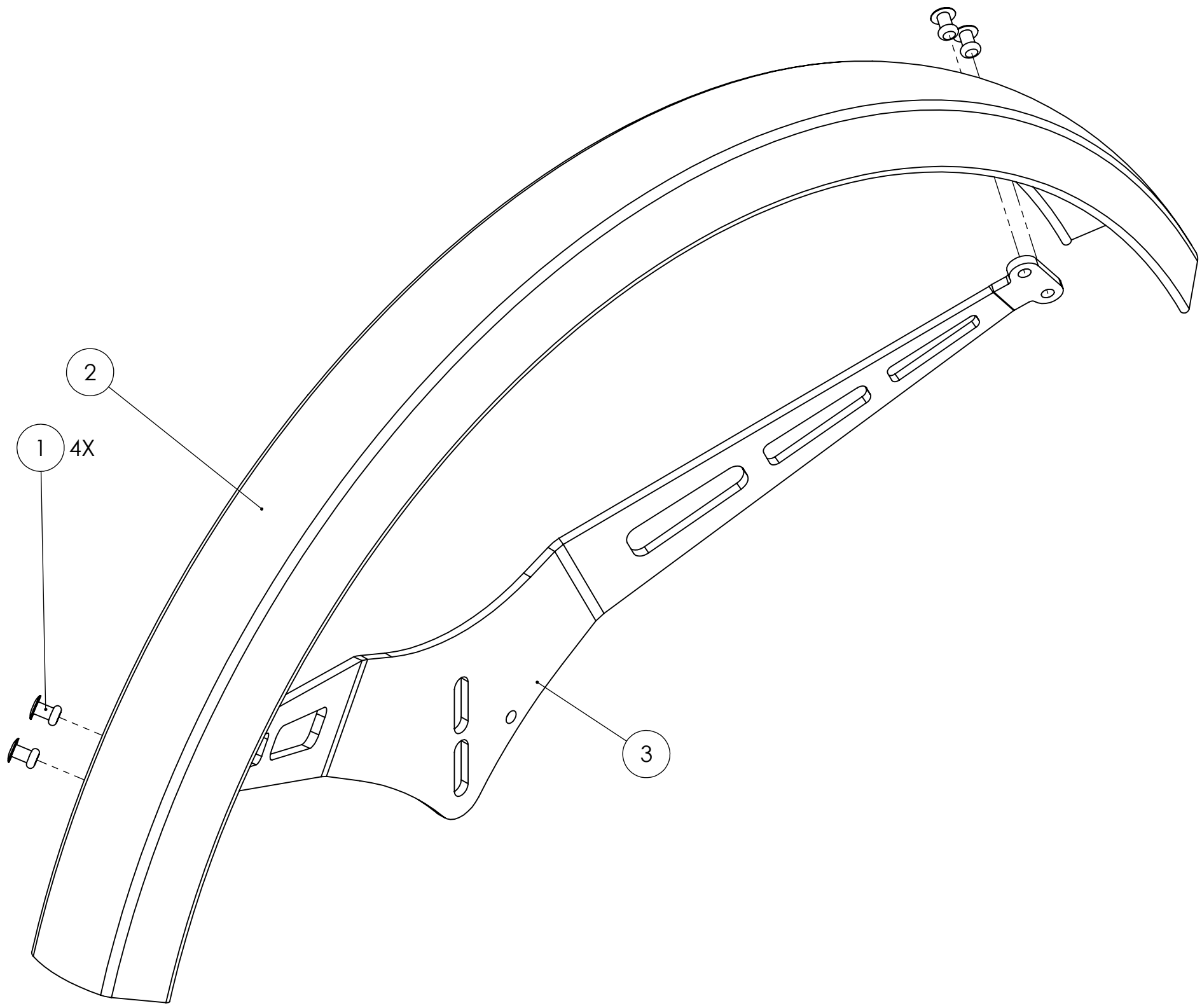

POS	ART. NO.	NAME
3	406208	Fender bracket back
2	406234	Fender 20" back
1	427338	Blind rivet aluminium Ø4 X 10

Drawing number: 406421 | Drawing name: Wheel 20" Rear

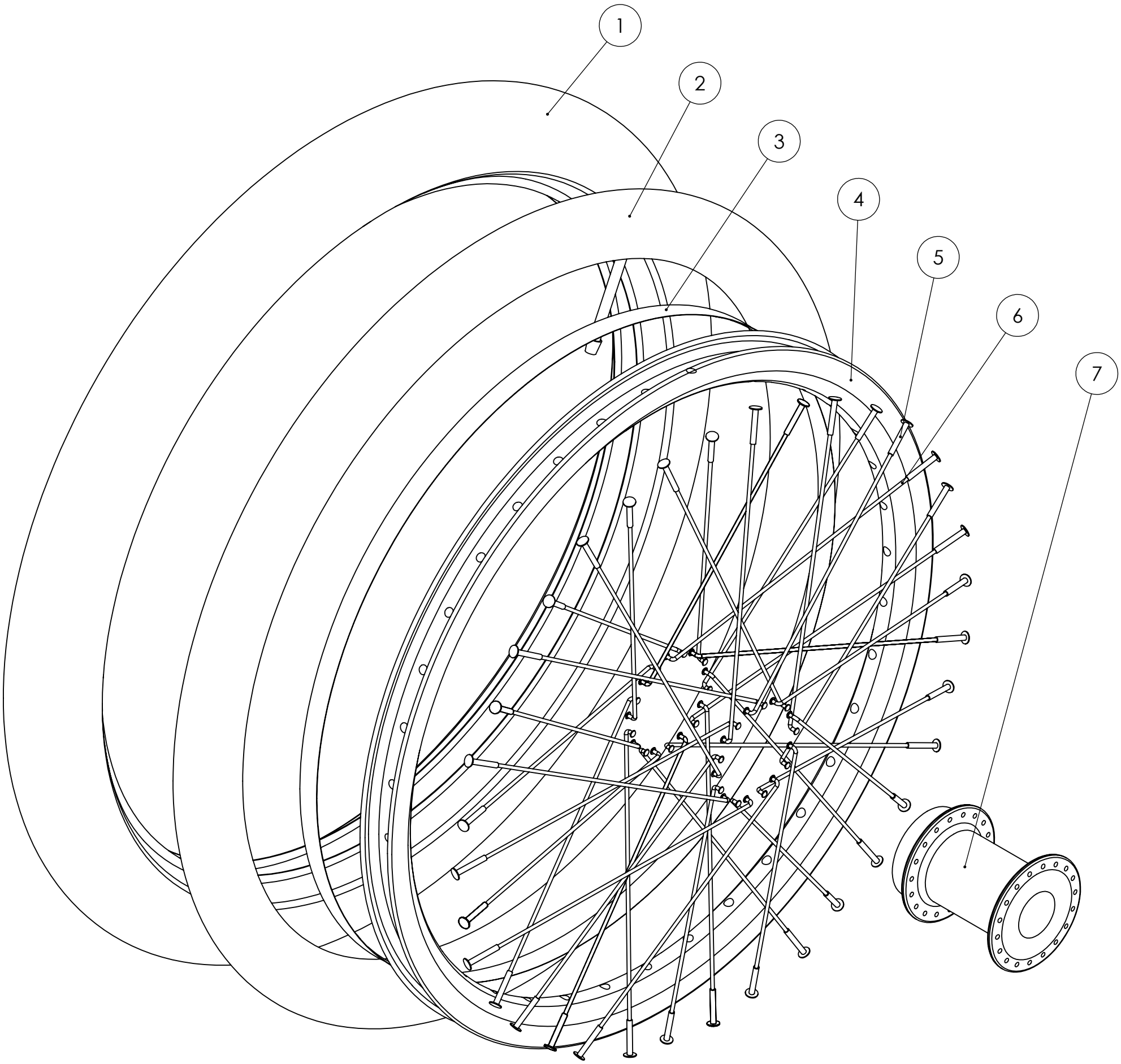

POS	ART. NO.	NAME
7	406400	Hub rear
6	426627	Spoke 13x178 stainless steel
5	435067	Nipple 13G
4	406227	Rim 20" X-plorer
3	426530	Rim tape 15mm
2	401346	Inner tube 20" Schwalbe DV 55-406
1	406303	Tire 20" Schwalbe big ben plus 55-406